RUSTLER

Chassis Assembly

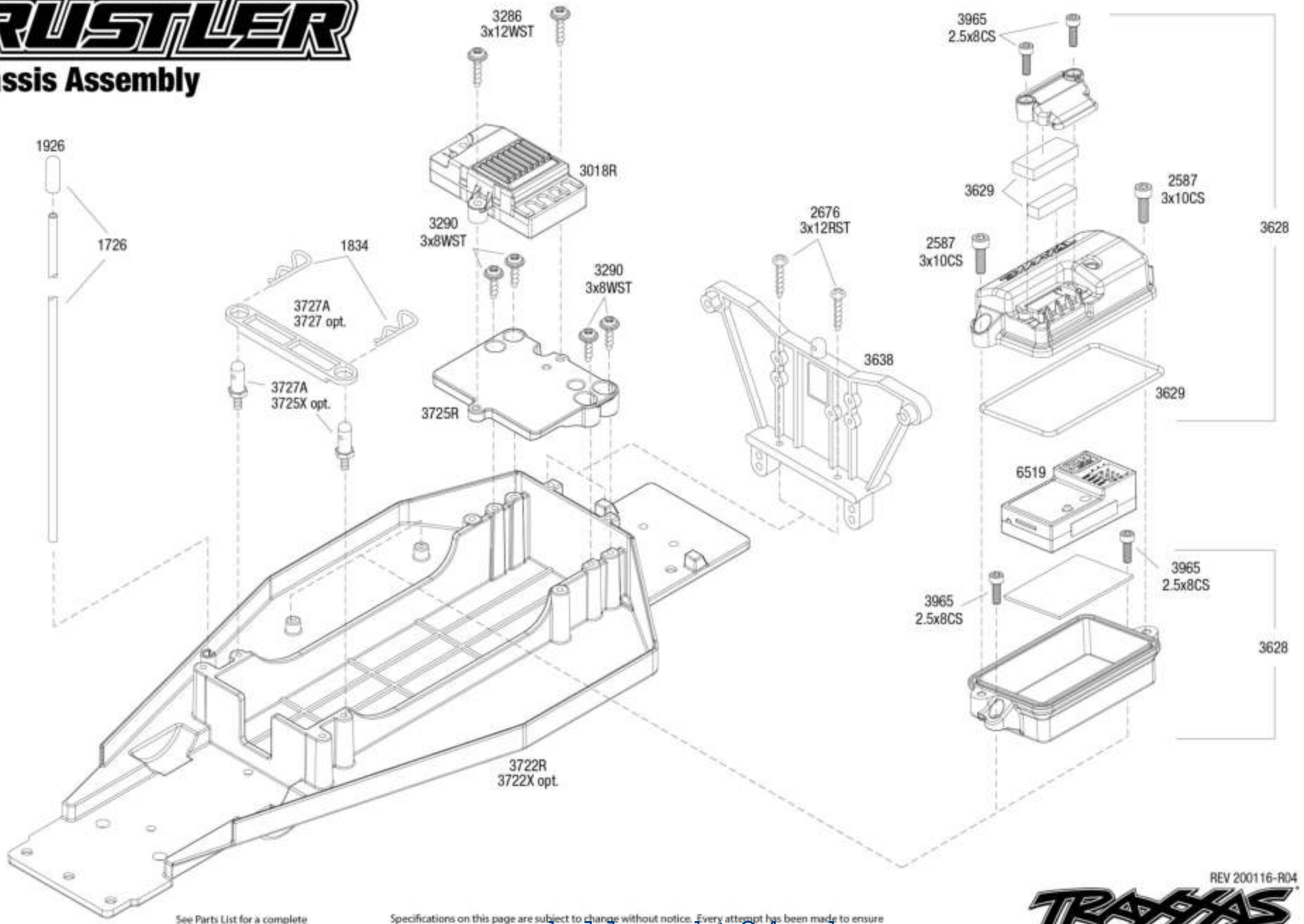

See Parts List for a complete listing of optional accessories.

Specifications on this page are subject to change without notice. Every attempt has been made to ensure the accuracy of this drawing. Traxxas cannot be held responsible for typographical or other errors.

REV 200116-R04

TRAXXAS

www.modellmarkt24.ch

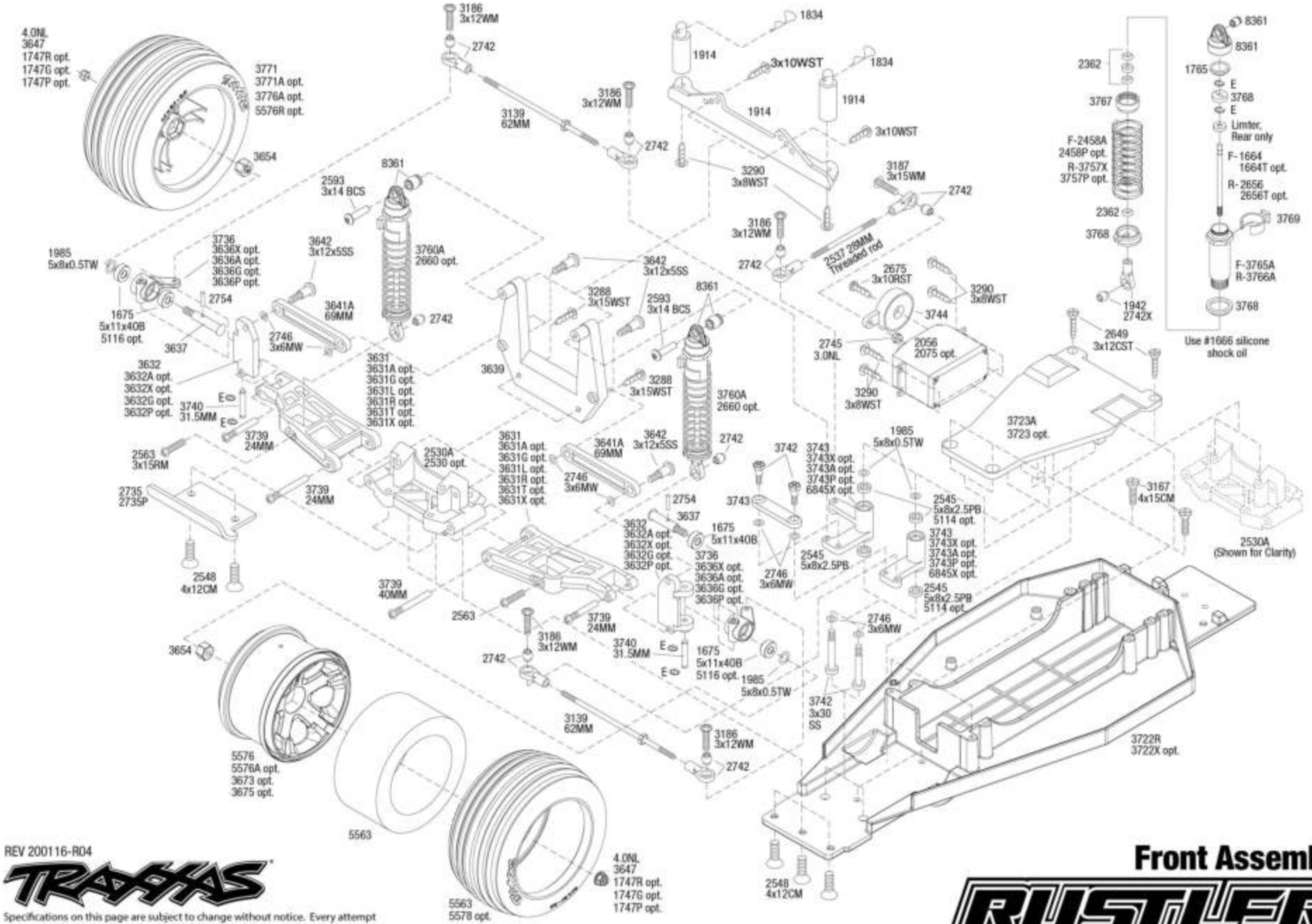

REV 200116-R04

TRAXXAS

Specifications on this page are subject to change without notice. Every attempt has been made to ensure the accuracy of this drawing; however, Traxxas cannot be held responsible for typographical or other errors.

See Parts List for a complete listing of items assembled.

Front Assembly

RUSTLER

www.modellmarkt24.ch

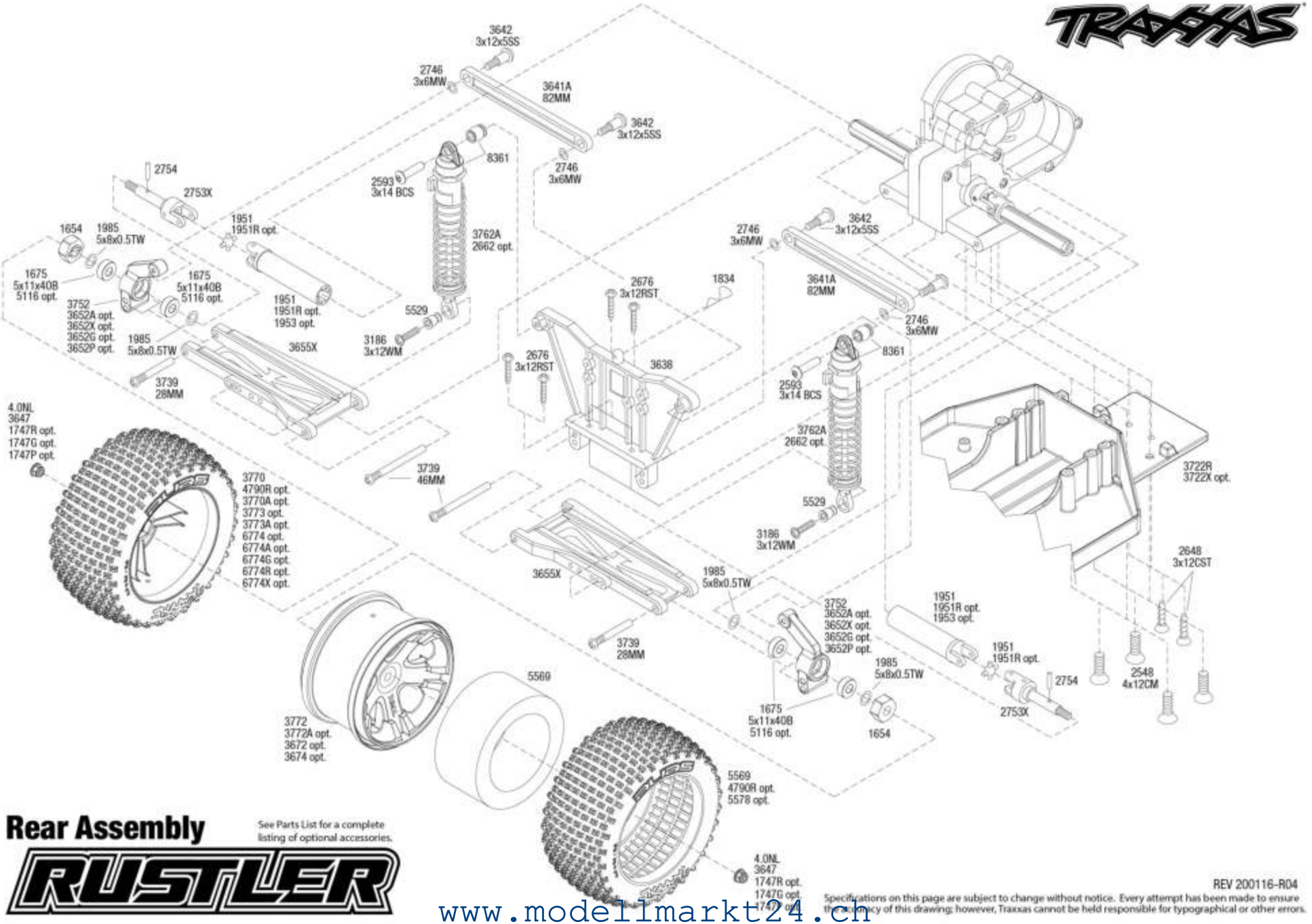

Rear Assembly

See Parts List for a complete listing of optional accessories.

RUSTLER

REV 200116-R04

Specifications on this page are subject to change without notice. Every attempt has been made to ensure the accuracy of this drawing; however, Traxxas cannot be held responsible for typographical or other errors.

www.modellmarkt24.ch

RUSTLER

Transmission Assembly

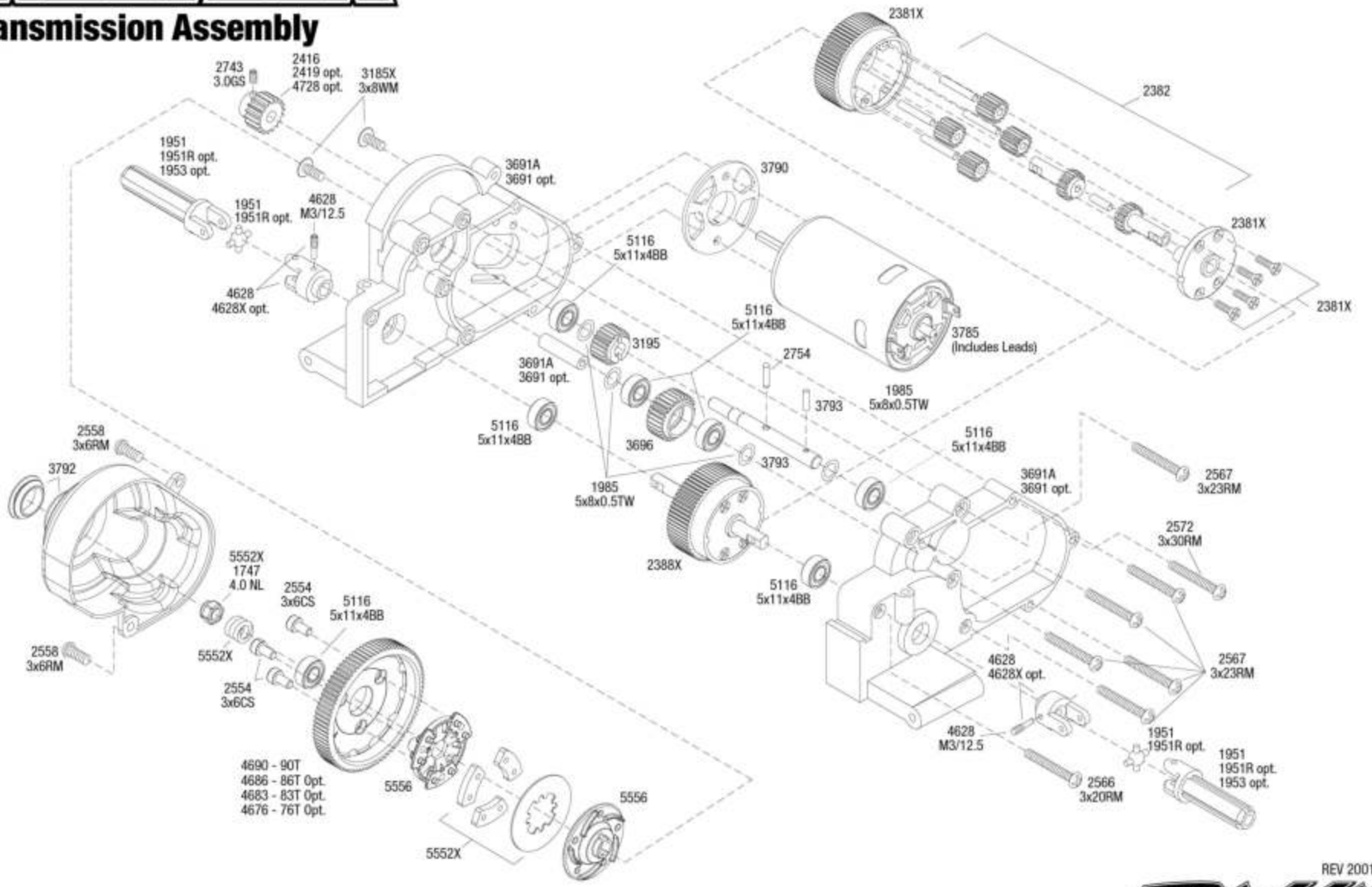

REV 200116-R04

See Parts List for a complete listing of optional accessories.

Specifications on this page are subject to change without notice. Every attempt has been made to ensure the accuracy of this drawing; however, Traxxas cannot be held responsible for typographical or other errors.

www.modellmarkt24.ch